DEPURECO® INDUSTRIAL VACUUMS USA

BL 45 JC



UL® CERTIFIED
SAFETY US·CA
E548400

NFPA 660
Standard for Combustible Dusts and Particulate Solids
Compliant

Depureco Industrial Vacuums USA

19121 Marketplace Avenue, Building 1, Suite 165
Plum Creek Business Park • Kyle • TX 78640

www.depurecousa.com
info@depurecousa.com

DEPURECO® INDUSTRIAL VACUUMS USA

2 HP
POWER

6200 in²
FILTER

11 gal
CAPACITY

SEALED MOTOR HEAD
FROM EXTERNAL
AGENTS

BRUSHLESS MOTOR
120 V

PRESSURE GAUGE
Dirty filter indicator.



JET-CLEAN
CLEANING SYSTEM
Clean the filter with a powerful jet of air without stopping the unit.

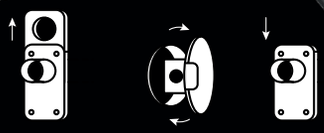

FILTER CARTRIDGE
HEPA H14



M CLASS
ANTISTATIC
CARTRIDGE FILTER



INLET
WITH DEFLECTOR Ø 2 in

ALL COMPONENTS
ARE GROUNDED

STAINLESS STEEL BIN
AISI 304

11gal

HIGHLY TRANSPORTABLE

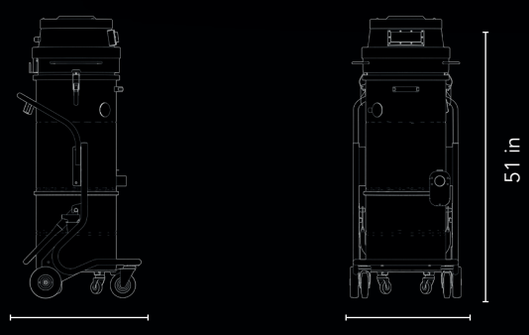

Weight: 99 lbs

COMPLIANT TO

UL® CERTIFIED
SAFETY US-CA
E548400

NFPA 660
Standard for Combustible Dusts and Particulate Solids
Compliant

SPEC SHEET

	Units	BL 45 JC
Suction type		Brushless motor
Power	HP	2 | 1 ~
Voltage | Frequency	V|Hz	120 | 60
Maximum vacuum	inH2O	92
Maximum air flow	CFM	129
Inlet	Ø in	2.75
Noise level - (EN ISO 3744)	dB(A)	72
Bin capacity	gal	11
Dimensions	in	21 x 20
Height	in	51
Weight	lb	99
Primary filter		
Type		Cartridge
Surface area	in^2 | in	6200
(Class EN 60335-2-69)		M Class
Media		Antistatic polyester
Filter cleaning		Jet-Clean
Absolute filter - Optional		
(Class - EN 1822)	in^2	H14
Media		Fiberglass

NORMATIVE REFERENCES

COMPLIANT TO

- NFPA 660
- NFPA 79
- UL 2011
- UL 508A
- CSA C22.2

ACCESSORIES



ATEX STARTER KIT Ø 2.75 in



ATEX KIT PRO Ø 2.75 in



FILTER CARTRIDGE HEPA 14

OPTIONAL



CYCLONIC SEPARATOR



Wet & Dry fixed brush floor tool